Physical Education Marking Scheme

Diploma teacher education (Shanzu Teachers Training College Academy)

Scan to open on Studocu

Studocu is not sponsored or endorsed by any college or university
Downloaded by Patrick Ngobiro (pngobiro@gmail.com)

SHANZU TEACHERS TRAINING COLLEGE

Name: MARKING SCHEME **Index No:** _____

1014
PI PHYSICAL EDUCATION
MOCK EXAMINATION
MARCH 2019
TIME: 2 Hours

Class : _____

Candidate's Signature: _____

Date: _____

PRIMARY TEACHERS MOCK EXAMINATION

M

PHYSICAL EDUCATION

2 Hours

INSTRUCTIONS TO CANDIDATES

1. Write your name, college class and index number in the spaces provided.
2. Sign and write the date of the examination in the spaces provided.
3. This question paper consists of two sections **A** and **B.**
4. Answer all the questions in section **A.**
5. Answer any **TWO** questions from section **B**.
6. Answers to **ALL** the questions must be written in the spaces provided in the booklet.
7. **DO NOT** remove any pages from this booklet.
8. Candidate should answer the questions in English.

For Examiner's Use Only

Section	Question	Maximum score	Candidate's score
A	1	7	
	2	17	
	3	12	
	4	11	
	5	13	
B	6	20	
	7	20	
	8	20	
		Total Score	

This paper consists of 8 printed pages

Candidate should check the question paper to ascertain that all the pages are printed as indicated and that no questions are missing.

This document is available on studocu

Downloaded by Patrick Ngobiro (pngobiro@gmail.com)

SECTION A: (60 MARKS)

Answer ALL the questions in this section in the spaces provided

1. **(a) Define the following terms as used in P.E (2mks)**

   (i)Leisure: freedom from obligatory duties.

   (ii)Exercise:activity that that exerts the body.

   (b) (i) State three ways through which gender issues are addressed in Physical Education. (3 marks)

   - Participation for both gender in physical activity.
   - Avoiding gender stereotyping.
   - Avoiding gender prejudice.
   - Equal representation in physical activities and sports.

   (ii)Highlight two physical benefit of participating in physical activities (2 marks)

   - -Improved appearance.
   - -Good body posture.
   - -Improve physical fitness components- flexibility, agility, endurance etc.
   - -Muscle hypertrophy.

2. **(a) (i) State any three factors to consider during group activities in an outdoor P.E lesson. (3 marks)**

   -Facilities

   -Equipments

   -Safety of the learners

   -Number of learners

   -Nature of the skill-pairing activity (size, weight and height of learners)

   (ii) State any three reasons for using apparatus in a P.E lesson. (3 marks)

   - -Enhance performance.
   - -Motivate learners.
   - -Make learning easier.
   - -Some activities can not be done without apparatus.
   - Enable learners develop value of sharing.
   - -Promote creativity and innovation-improvisation

   (iii) List down two components of a P.E scheme of work. (2 marks)

   - -Week
   - -Lesson
   - -Topic/content
   - -Sub-topic
   - -Objectives
   - -T/L activities
   - -Resources
   - -Reference
   - -Remarks

Downloaded by Patrick Ngobiro (pngobiro@gmail.com)

(iv) State any three dangers of improvised apparatus (3 marks)

- Not durable.
- -May not be safe/can cause injuries.
- -Not motivating to learners.
- -May not resemble the real apparatus.
- -May not be effective.
- -May lead to environmental degradation- pollution and loss of environmental beauty

(b) State any three factors to consider when purchasing a discus implement. (3 marks)

- -Weight.
- -Material.
- -Shape.
- -Durability.

(c) Give any three examples of a crouch start. (3 marks)

- -Elongated.
- -Bullet /medium.
- -Bunch.

3. (a) State three roles of a spotter during gymnastics. (3 marks)

- -Support performer.
- -Give confidence to the performer.
- -Prevent injury to the performer.
- -Motivate the performer.

(b) State any three progressive stages of performing forward roll. (3 marks)

- -From a squatting position.
- -Palms placed on the ground facing forward, arms shoulder width a part.
- Tuck chin to touch the chest
- -Transfer body weight from legs to hands and roll the trunk forward to land on the shoulders.
- - From sitting position, legs folded, arms raise straight and above the head to finish at standing position.

(c) Highlight any three attacking skills used in the game of Rounders. (3 marks)

- -Running.
- -Batting ball furthest.
- -Stealing a run

(d) Name any three officials in the game of Softball. (3 marks)

- -Plate umpire.

This document is available on studocu

Downloaded by Patrick Ngobiro (pngobiro@gmail.com)

- -Base umpire.
- -Scorer.

4. (a) Explain the following terms as used in Swimming. (3 marks)

(i) **Buoyancy**- a tendency to stay a float on water.

(ii) **Floating**-ability to remain on water for an indefinite period without movement of body

(iii) **Glide**-is the initial experience of moving on the surface of water.

(b) Give any two instruments used during dance **(2 marks)**

- -Drum.
- -Percussion.
- -Shakers.

(c) Briefly explain rope grip for anchor in tug of war **(3 marks)**

- -Make an ordinary grip using palm facing down.
- -Rope passes between the body and upper part of arm.
- -Rope to cross through back horizontally and fall freely in front.

(d) Give any three specifications of rugby ball **(3marks)**

- -Oval shape.
- -Made of leather.
- -Weight 410-400g.
- -Pressure of 0.67-0.70g.

5. (a) State any two characteristics of voluntary muscles **(2 marks)**

- -Controlled at will.
- -Stripped/striated
- -Give force for movement of the skeletal system.
- -Not branch
- -Multinucleated
- -Work antagonistically

(b) Highlight any three progressive stages of First Aid

(3marks)

- -Assessment
- -Diagnosis.
- -Treatment.
- -Disposal.

(c) Give any three body types that cannot be changed by exercise or die **(3marks)**

- -Endomorph.
- -Mesomorph.

Downloaded by Patrick Ngobiro (pngobiro@gmail.com)

- -Ectomorph.

(d) State any three factors to consider when selecting a format to use during competition.
(3 marks)

- -Numbers of teams registered.
- -Facilities available.
- -Equipment available
- -Funds
- -Officials
- -Weather.
- -Time
- -Nature of the event.

(e) State any two ways through which a teacher can avoid being legally liable in sports.
(2 marks)

- -Through supervision.
- -Use of standard equipment and facility.
- -Fair weather.
- Adequate space.
- Accurate demonstration.
- -Clear teaching points.
- -Proper grouping.
- -proper pairing.
- -Adequate warm up.
- -Teaching skills from simple to complex

SECTION B (40 MARKS)

Answer any two questions from this section

7. (a) (i)Explain the application of the following time rules in a game of basketball.
(4 marks)

This document is available on studocu

Downloaded by Patrick Ngobiro (pngobiro@gmail.com)

-3 Seconds - a player shall not remain in the opponents' restricted area for more than three consecutive seconds while their team is in control of a live ball in the front court.

-5 Seconds- It is called for violation ofa closely guarded offensive player with the ball for five seconds or more, and does not pass, shoot, or dribble within that time.

-8 seconds-After the attacking team gains possession of the ball in their own half, they have eight seconds to move the ball into the opposition's half.

-24 seconds-Once a team gains control of the basketball, that team has 24 seconds to attempt or put up a legal shot.

(ii) Describe how lay-up shot is executed in a game of Basketball.
(4 marks)

-While holding the ball face the right side of the backboard with both feet together .
-Take one step forward with the inside(left) foot, plant that foot and jump off it .
-Ball is picked up from the dribble, the ball must come to make contact on the top of the chest and chin.
-Once the ball is picked up, a player's eyes should be focused on the basket.
-The shooting hand should extend fully pushing through the ball and finishing with a flick of the wrist.
-The ball should make a light touch off the backboard and into the basketball hoop.

(b) (i) State six instances that would lead to the award of penalty kick in a game of soccer. (6 marks)

- Kicking/attempting to kick an opponent.
- Tripping/attempting to trip an opponent.
- Jumping at an opponent.
- Striking/attempting to strike an opponent.
- Charging an opponent.
- Pushing an opponent
- Holding an opponent
- Tackling and making body contact with an opponent before the ball.
- Deliberate handling the ball.
- Spitting at an opponent

Downloaded by Patrick Ngobiro (pngobiro@gmail.com)

(ii) Describe the procedure of taking a "throw-in" in a game of Soccer.(6 marks)

- Ball thrown from the sideline at the point where the ball had gone out of play.
- Legs shoulder width apart, with both feet in contact with the ground.
- Hold the back of the ball firmly with both hands.
- Throw to start in level with the back of the neck and over the head.
- Both hands should be used with equal force to release the ball to the direction of the throw.
- No movement while throwing-Follow through for recovery after release of ball.

8. (a) (i) Identify three conditions that should be observed during a penalty pass in a game of Netball. (3 marks)

- The pass is taken from the place where the infringement occurred.
- Any player who is allowed in the area can take the pass.
- The **penalized** player stands beside and away from the player taking the pass
- The penalized player makes no attempt to play until the ball has left the thrower's hands,

(ii) Outline five factors to be emphasized when teaching single handed shoulder pass in a game of Netball. (5 marks)

- Should be hard, fast and direct.
- Use natural body movement.
- Direct the pass to the space ahead of intended receiver.
- First look to where the throw is to be directed.
- Have firm balance position of body and feet.
- Pass ball accurately aiming at the hip, chest or head height of receiver.
- Rotate hip and shoulder for follow through.
- Put weight on back foot, same side as the ball.
- Ball at a shoulder height.
- Spread fingers of the throwing hand behind the ball.
- Put ball through at shoulder height and rotate hips and shoulders forward.
- Follow through up to the point when the arm is fully extended.
- Do it as fast and continuous movement.

(b) State any two examples of the following sanctions in Netball. (2marks)

(i) team sanctions
-Ordering off

(ii) player sanctions
-Penalty pass
-Penalty shot

This document is available on studocu

Downloaded by Patrick Ngobiro (pngobiro@gmail.com)

-Free pass

(c) (i) State two occasions when a player may dribble in the game of Hockey. (2marks)

- To evade the opponents
- Allow the team mate to get free
- Deceptive motion.
- Avoid losing possession of the ball
- To cover distance/advancement so as to shoot.
- Protecting the ball from opponent.
- Shield the ball from defenders.

(ii) Mention four uses of the shooting circle in the game of Hockey. (4marks)

- Attempting to score
- Offer protection to the goalkeeper
- Houses the penalty stroke.
- Area of jurisdiction for the goalkeeper.
- For scoring.
- Used during penalty corner.
- For any infringement that may interfere with clear chance of scoring will lead to penalty stroke.

(iii) Outline the teaching points of a scoop in the game of Hockey (3marks)

- With bend knees.
- Lower the stick to the ground
- Pick the ball up in one fluid motion.

(iv) Which is the international body that governs the game of Hockey (1 marks)

- International Hockey Federation.(IHF)

9. (a) (i) Identify the following parts of a Handball court. (6 marks)

Downloaded by Patrick Ngobiro (pngobiro@gmail.com)

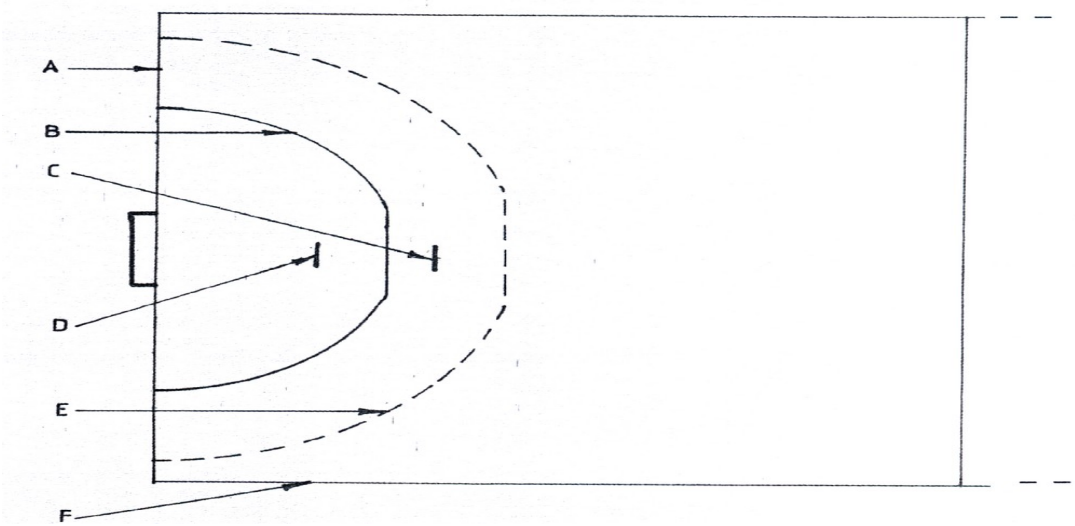

- A -Goal line
- B- Goal area line
- C- Penalty line
- D -Goal Keeper line
- E- Free throw line
- F- Side line

(ii)Describe the progressive teaching points for the dive shot in Handball (4marks)

- Firmly grip the ball with fingers well spread.
- After a maximum of 3 steps run, a player breaks contact with the ground and stretches the body out towards the goal.
- Forcefully release the ball on target using the shoulder throw.
- Roll over the throwing shoulder for recovery.

(iii) Name two ancient games similar to the present game of Handball

(2marks)

- Danish handbold
- Kingsbergerball
- Raffball

(b) (i) What is a rotational fault as applied in the game of Volleyball. (1mark)

-An infringement of being out of alignment, a point is awarded to the opponent.

This document is available on studocu

Downloaded by Patrick Ngobiro (pngobiro@gmail.com)

(ii) Identify two service fouls that may occur during execution of a service in Volleyball. (2marks)

- Failure to toss ball
- Stepping on back line/service line before serving ball
- Stepping into the field before serving ball
- Ball fails to cross net .
- Ball passes over outside the crossing plane.
- Served ball land outside the opponent's court.
- Failure to hit the ball with one hand
- Team mates not to screen/mask-service.
- Ball served within 8 sec after 1st whistle

(iii) Describe the procedure followed when a player is "given" red card in a game of Volleyball. (2marks)

- Referee blows the whistle
- Indicate the nature of the fault.
- Indicate the player at fault and award red card.
- Indicate the team to serve

(iv) Highlight three duties of the line judges during a game of Volleyball (3marks)

- Check 'ball in' and 'ball out' .
- Indicate any service fault to the first referee.
- Indicate when the ball touches the blocks before it lands outside the court boundaries.
- Indicate to the first referee any ball crossing the net outside the antennae.
- Indicate any contact with antennae by a player.

Downloaded by Patrick Ngobiro (pngobiro@gmail.com)